Experiment No: 02
Experiment Name: Experiment on AM Modulation and Demodulation using Hardware.

Objective:

1. To understand the principle of amplitude modulation and demodulation.
2. To understand the waveform of AM signal and calculating the percent of modulation.
3. To observe the signal reproduction using diode detector.

Requirement:

- Module KL-93002
- Power Supply
- Oscilloscope
- Function generator
- Connecting wire & plug

Working Procedure:

Follow the following steps:

1. Locate AM modulator and diode detector circuit on Module KL-93002.

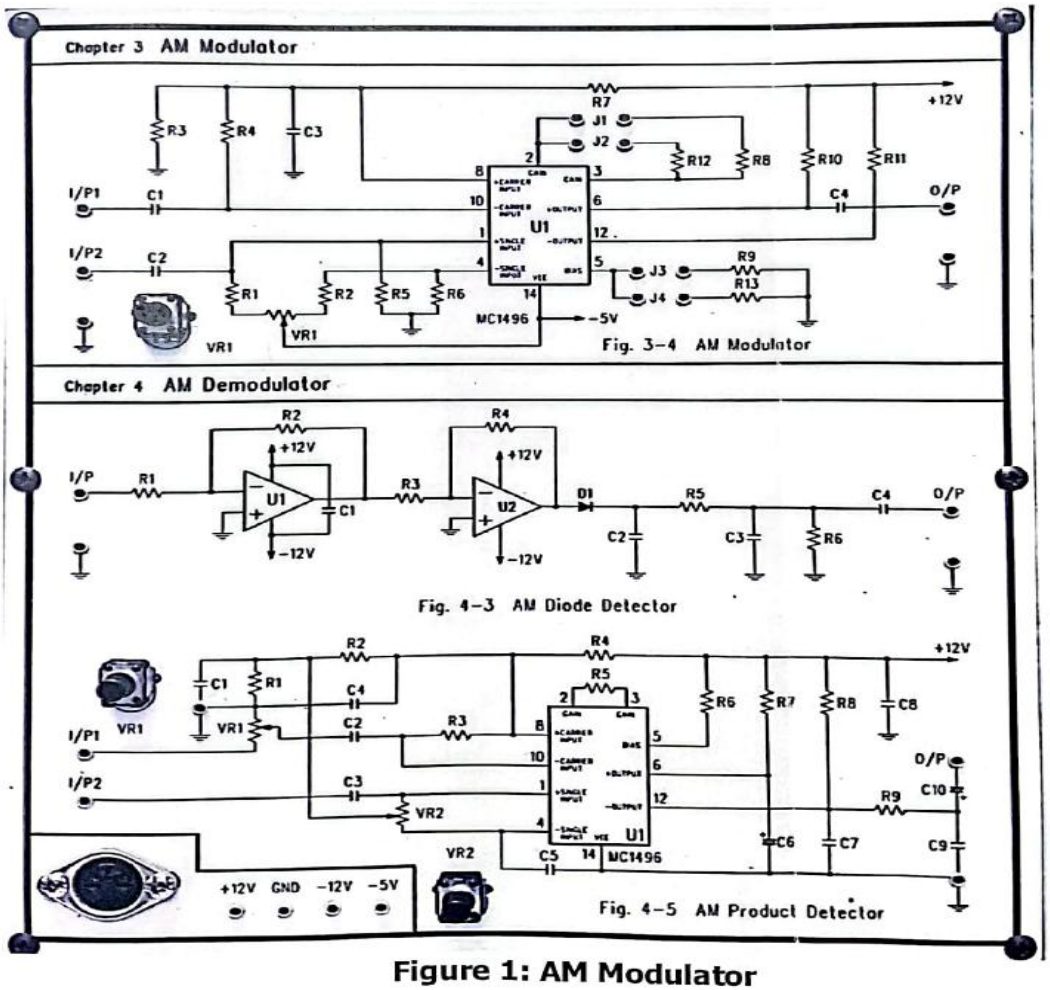

Figure 1: AM Modulator

2.Insert connect plug J1 & J3 to set R8 = 1k and R9 = 6.8k ohms .
3. Set Function generator-1 frequency and amplitude to 100kHz, 200mVp-p.
4. Set Function generator-2 frequency and amplitude to 1kHz, 250mVp-p.Function generator -1 is used here to give carrier signal which is high frequency signal and Function generator-2 is used here to give message signal which is a low frequency signal. Vm = Message signal amplitude, Vc = Carrier amplitude fm = Msg frequency, fc = Carrier frequency

Now connect FG1 output to I/P1 and FG2 output to I/P2 in AM modulation circuit.

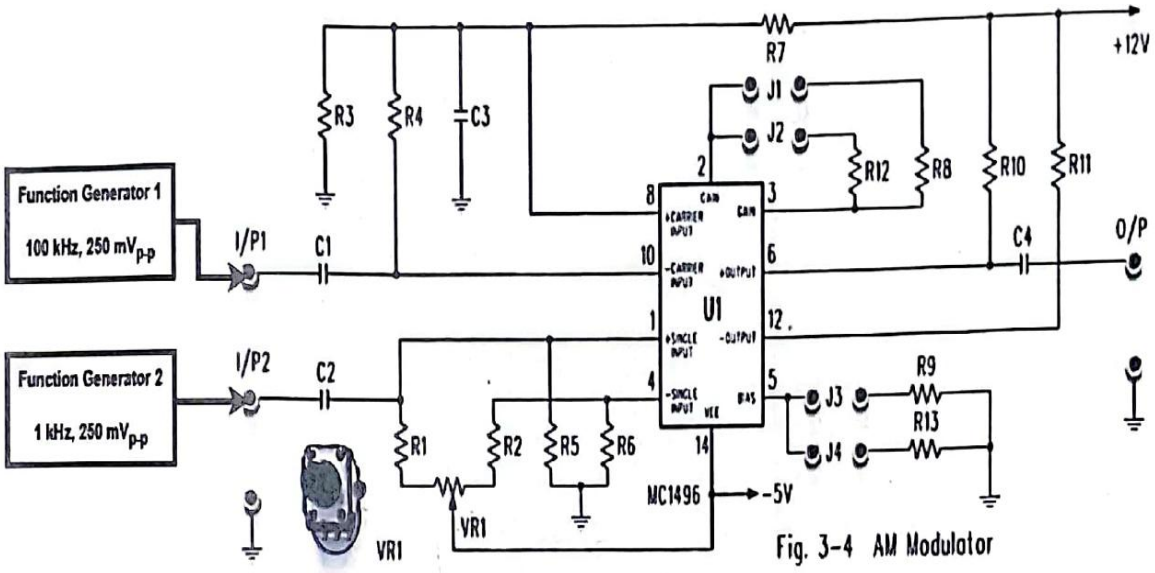

Figure 2: Connection diagram of FG output with KL-93002

1. Connect Digital Oscilloscope to the AM Output.
2. Connect power supply and observe the AM output. Adjust VR1 to get E_{min} = 44 mV and E_{max} = 140 mV to set modulation index at 50%.
3. Connect AM output to diode detector input. Observe the output and record the data in table1.
4. Now according to given parameter in each table record the data into data table (1 to 2) and carefully observe the change in waveform, measure Emax and Emin.

$$\text{Percentage of Modulation, M} = \frac{E_{max} - E_{min}}{E_{max} + E_{min}} \times 100\%$$

Data Table 1:

V_c	V_m	F_c	F_m	AM Output Waveform		Demodulator output
$250mV_{P-P}$	$250mV_{P-P}$	100 kHz	1 kHz	E_{max}:428mV E_{min}:10mV Modulation Index: 86%	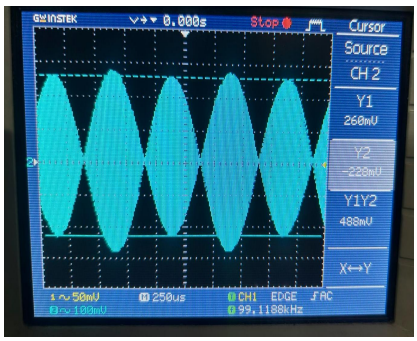	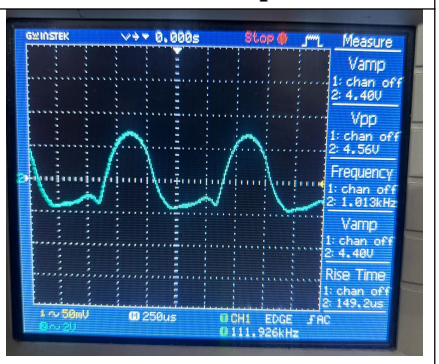

Data Table 2:

V_c	V_m	F_c	F_m	AM Output Waveform		Demodulator output
$250mV_{P-P}$	$250mV_{P-P}$	200kHz	2kHz	E_{max}: 96mV E_{min}: 3mV Modulation Index: 93%	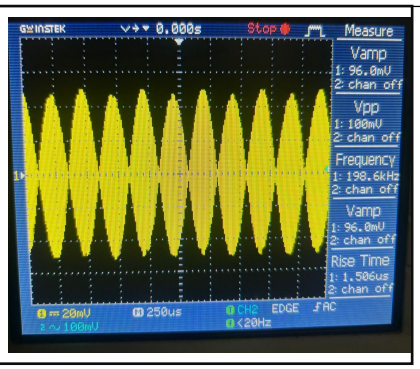	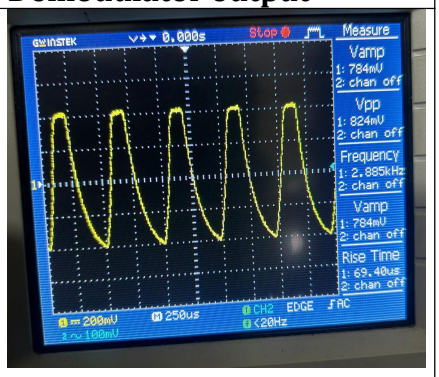

Discussion: In this experiment, we practically implemented the concepts of Amplitude Modulation (AM) and Demodulation using hardware components. The modulation process involved combining a low-frequency message signal with a high-frequency carrier signal to produce an AM waveform. By observing the output on the oscilloscope, we were able to clearly see the envelope of the carrier being shaped according to the message signal, which confirmed successful modulation.

During demodulation, we used an envelope detector circuit to recover the original message signal from the AM wave. The demodulated output closely matched the original message, which indicates that the circuit design was appropriate and functioning correctly. However, we also observed that if the modulation index was too high or too low, the demodulated signal became distorted. This highlighted the importance of maintaining a proper modulation index for effective transmission and recovery.

Some minor signal losses and distortions were observed due to hardware limitations and noise, which are common in practical setups. Filtering in the demodulator stage helped reduce high-frequency noise and improved signal clarity.

Atlast, the experiment provided valuable hands-on experience with analog communication systems and reinforced theoretical concepts related to AM modulation and demodulation.